TECHNICAL DATA

STRATASEAL® HR

HOT-APPLIED RUBBERIZED ASPHALT WATERPROOFING

DESCRIPTION

StrataSeal HR is a single component, 100% solid, hot-applied rubberized asphalt membrane used for waterproofing and protected roof applications. StrataSeal HR reinforced assembly is a tough, flexible waterproofing membrane that incorporates a reinforcing fabric for enhanced durability and physical properties. The reinforcing fabric is applied over the 90-mil (2.3 mm) thick base layer of rubberized asphalt while the membrane is still warm and tacky. Then a second 125 mil (3.2 mm) thick layer of rubberized asphalt fully encapsulates the reinforcing fabric for a total system thickness of 215 mils (5.5 mm). Depending on the application and project design perimeters, subsequent protection, drainage, insulation and wear course materials are installed over the waterproofing membrane. StrataSeal HR is applied as a thick, joint-free membrane that adheres tenaciously to virtually any sound surface which allows for a wide variety of job site conditions. The fast set up time speeds the completion of the waterproofing and allows the project to proceed on schedule. StrataSeal HR is installed in a hot fluid state with excellent flow characteristics to contour the substrate and completely fill around mechanical and drainage penetrations. It sets to form a thick, monolithic barrier fully adhered to the concrete thus protecting the structure from water ingress.

APPLICATIONS

StrataSeal HR is ideal for new construction and remedial waterproofing and roofing applications. The membrane can be applied to horizontal and vertical concrete surfaces and is designed for use on splitslab plaza decks, pavered plaza decks, parking garages, bridge decks, foundation walls, tunnels, planters, earth covered structures and roof decks using a protected membrane system or green roof system. StrataSeal HR can be applied at below freezing temperatures to substrates without ice or frost.

StrataSeal HR is not recommended for use as an exposed membrane or wearing course surface. Nor is it recommended for use with lightweight insulating or cellular concrete.

INSTALLATION

Substrate Preparation: Structural weight concrete shall be water cured and in place preferably for 28 days, minimum 14 days. Lightweight structural concrete shall be water cured and in place preferably for 60 days, minimum 28 days. Venting metal deck form pan is recommended to facilitate drying.

Concrete to receive membrane shall be sound, dry, clean and free of dirt, laitance, oil, grease, wax, tar, asphalt, paint, curing agents, and other contaminants which may interfere with the adhesion of the membrane. Concrete surface shall be light broom or board float textured finish. A steel float finish surface will provide too smooth a surface for proper adhesion, and therefore must be sandblasted to roughen surface.

Remove fins, ridges, or other projections to provide a level surface. Fill holes, honeycombs, rock pockets, spalls or other voids and depressions with approved cementitious patching compound.

Precast concrete decks must be mechanically secured to minimize movement and all joints must be grouted. Contact CETCO for guidelines on substrates and conditions not covered herein.

Details and Flashings: Prepare concrete cold joints, concrete cracks, deck transitions, penetrations and expansion joints in accordance with manufacturer's current details and recommendations. Prime all substrate surfaces prior to performing detailing work as stated below:

NON-MOVING CRACKS AND JOINTS: Cracks up to 1/16" (1.6 mm) require no special treatment. Reinforce all cracks and joints 1/16" (1.6 mm) to 3/16" (4.8 mm) in a minimum 6" (150 mm) wide strip of Stratabond 100 fabric reinforcement embedded in 90 mil (2.3 mm) thick by 9" (225 mm) wide tack coat of StrataSeal HR. Reinforce all cracks and joints 3/16" (4.8 mm) to 1/2" (12 mm) in width with minimum 6" (150 mm) wide strip of N-Flash embedded in 90 mil (2.3 mm) thick by 9" (225 mm) wide tack coat of StrataSeal HR. Embed the reinforcing while the tack coat is still warm and tacky. Overlap reinforcing strip ends a minimum of 2" (50 mm), ensuring lap receives rubberized asphalt.

PRECAST DECK JOINTS: Reinforce all non-moving, grouted precast joints with a minimum 6" (150 mm) wide strip of N-Flash embedded in 90 mil (2.3 mm) thick by 9" (225 mm) wide tack coat of StrataSeal HR. Embed the reinforcing while the tack coat is still warm and tacky. Overlap reinforcing strip ends a minimum of 2" (50 mm), ensuring lap receives rubberized asphalt.

EXPANSION JOINTS: Expansion joints shall be sealed with proper expansion joint material, as approved by the project engineer, compatible with hot rubberized asphalt waterproofing membrane. Contact membrane manufacturer for expansion joint detailing illustrations to address specific project conditions.

215-mil Thick reinforced membrane

2870 Forbs Avenue Hoffman Estates, IL 60192
847.851.1800 | 800.527.9948

CETCO®
www.CETCO.com

STRATASEAL HR

HOT-APPLIED RUBBERIZED ASPHALT WATERPROOFING

DECK TO WALL TRANSITIONS: Apply StrataSeal HR membrane up face of wall per project requirements and extend onto horizontal deck; with Stratabond 100 reinforcing fabric terminating a minimum of 1" (25 mm) prior to membrane termination at deck corner. For deck transition incorporating N-Flash, refer to manufacturer's current N-Flash details.

DECK DRAINS: Apply 125 mil (2.3 mm) thick, 12" (300 mm) minimum ring of membrane around all deck drains. Place flashing sheet over coated drain flange extending a minimum of 6" (150 mm) around the flange. Apply a second coat of membrane over flashing sheet. Apply clamping ring.

Primer: Apply Strataprime SB evenly with handheld sprayer at a rate of 300-500 ft^2 per gallon (28-46 m^2 per 3.8 l) to all surfaces to receive StrataSeal HR. Primed concrete surface will look discolored, but not black. Allow primer to dry prior to installing the membrane. Install membrane same day as primer.

Membrane Heating: Heating of StrataSeal HR is accomplished utilizing a double jacketed, oil bath tank or air jacketed kettle with mechanical agitation designed for hot-rubberized asphalt membrane. Heat membrane until membrane can be drawn free flowing and lump free at a temperature range of 325°F to 340°F (163°C to 171°C). Place the membrane block, including the polyethylene wrap, in the kettle. Caution: Do not exceed maximum safe operating temperature of 375°F (190°C).

Membrane Installation: Apply the first layer of StrataSeal HR at a minimum of 90 mils (2.3 mm) thickness to the entire area to be waterproofed, including all previously applied detailing. (The most popular method of membrane application is with a squeegee.) While the first layer is still warm and tacky, firmly press a layer of the reinforcement fabric into the surface of the membrane, overlapping fabric edges slightly - minimum 1/2" (12 mm) to 1" (25 mm). Then apply a second layer of StrataSeal HR over the reinforcing fabric at a minimum thickness of 125 mils (3.2 mm) for a total minimum membrane thickness of 215 mils (5.5 mm). Ensure reinforcing fabric is completely covered by the top membrane layer and that a layer of membrane is placed between the fabric overlaps by utilizing the "push-pull" squeegee method against the fabric overlaps.

For prolonged or daily membrane stops, lightly wipe all previously applied material edges a minimum of 6" (150 mm) wide with mineral spirits or a citrus acid based solvent to remove any accumulated dirt and dust. The new work shall overlap previous work a minimum of 6" (150 mm).

Protection Layer: While the top coat of StrataSeal HR is still warm and tacky, embed the specified protection/separation sheet into the membrane ensuring a good bond. Overlap the seams of the protection layer and seal with StrataSeal HR hot applied rubberized asphalt in the seams and laps. Refer to specific protection layer Tech Data Sheet for detailed instructions.

Flood Test: Verify that the structure can withstand the deadload weight of the water prior to commencement of the flood test. If not, then confer with CETCO for alternate testing procedures. Allow StrataSeal HR to cool minimum 24 hours prior to performing flood test. Plug all drains and provide barriers necessary to contain water. Allow for any overflow to protect the building in the event of rain. Pond water to a depth of 2" (50 mm) for a period of 48 hours. Inspect for leaks and repair membrane if leaks are found. Repeat water test process after making repairs. For HydroShield warranty coverage, flood test shall be witnessed and documented by independent inspector.

180 Mil Thick Reinforced Membrane: For less demanding applications, StrataSeal HR can be applied at 180 mils (4.6 mm) thick or per project specifications.

FINISHED ASSEMBLY

Various cover assemblies installed over StrataSeal HR are completed according to project design and specifications. Typical project assembly designs are concrete and paver plaza decks, asphalt paving deck, bridge deck, and roofing surfaces for protected roof and greenroof systems.

PACKAGING

StrataSeal HR is packaged in 30-lbs. (13.6 kg) per box with the rubberized asphalt wrapped in a polyethylene film liner.

COVERAGE

Following is a guide to estimate the amount of StrataSeal HR required for various membrane thicknesses. Actual results will vary with substrate conditions and installation techniques.

- 215 mils thick = 1.35 lbs/ft^2 (5.6 mm thick = 5.5 kg/sq m)
- **180 mils thick = 1.13 lbs/ft^2 (5.6 mm thick = 5.5 kg/sq m)**
- **90 mils thick = 0.56 lbs/ft^2 (5.6 mm thick = 5.5 kg/sq m)**

ACCESSORY PRODUCTS

Aquadrain: prefabricated drainage composites.

BB-200: 8-ft wide rolls of heavy spun bonded polyester filter fabric for filter and ballast layer over insulation course.

N-Flash: 60-mils thick uncured, nonstaining neoprene flashing. Also available: Bonding Adhesive, lap splicing cement and lap sealant N-Flash is available in widths of 6", 12" and 36"; all 100 feet in length.

RAP 200: 90-mils reinforced rubberized asphalt protection sheet with both sides sanded.

Stratabond 100 - 1.5 oz/sq yd spun bonded polyester high-strength reinforcing fabric in 48" width.

Strataprime SB: solvent-based asphalt emulsion primer to condition substrate for membrane and flashings.

Strataprime WB: water-based asphalt emulsion primer to condition substrate for membrane and flashings. XPS40 - 40psi rigid, extruded insulation board. Board size 2' (0.6 m) x 8' (2.4 m). Thicknesses: 1", 1.5", 2" and 3".

XPS60: 60 psi rigid, extruded insulation board. Board size 2' (0.6 m) x 8'(2.4 m). Thicknesses: 2" and 3".

XPS100: 100 psi rigid, extruded insulation board. Board size 2' (0.6 m) x 8' (2.4 m). Thickness: 2".

LIMITATIONS

StrataSeal HR is designed for subsurface waterproofing and roofing applications and should only be used in applications where it is protected from permanent UV exposure and traffic. Protection layer must be installed immediately after membrane. Do not allow construction traffic on unprotected membrane. Repair any membrane damage immediately.

Horizontal surfaces should be sloped to provide positive drainage to deck edge or interior drains. All surfaces and detailing must be prepared in accordance with manufacturer's recommendations and adjacent areas protected. StrataSeal HR should not be applied to surfaces with frost or ice, or at ambient air temperatures that are below 0°F (-18°C).

Protection course, drainage systems, insulation or other courses should not penetrate the membrane. Mechanical fastening of subsequent layers with termination bars installed to adjacent approved surfaces may be utilized per manufacturer's standard detail drawings. The use of solvent based products over StrataSeal HR is not recommended. Protective clothing should be worn during application, including a mist respirator and full coverage eyewear. Install StrataSeal HR only in well ventilated areas. If working in tented installations, a protective air respirator is required. Avoid prolonged exposure to product and product vapor. CETCO recommends that StrataSeal HR should not be installed above applicator's chest height. Refer to MSDS for first aid and emergency information.

StrataSeal HR is not intended as a filler for asphalt concrete repair. Refer to manufacturer's standard detail drawings for joint treatment and crack treatment using appropriate standard detail drawings. StrataSeal HR is not recommended for use on lightweight insulating or cellular concrete. Contact CETCO for usage of StrataSeal HR on retrofit applications.

Refer to standard detail drawings for specific application installations. Any deviation from standard detail drawings must be approved by CETCO prior to installation. Failure to do so may void warranty.

Warranty: Prior to material specification and application, contact CETCO for terms and conditions required for issuance of material or HydroShield warranty.

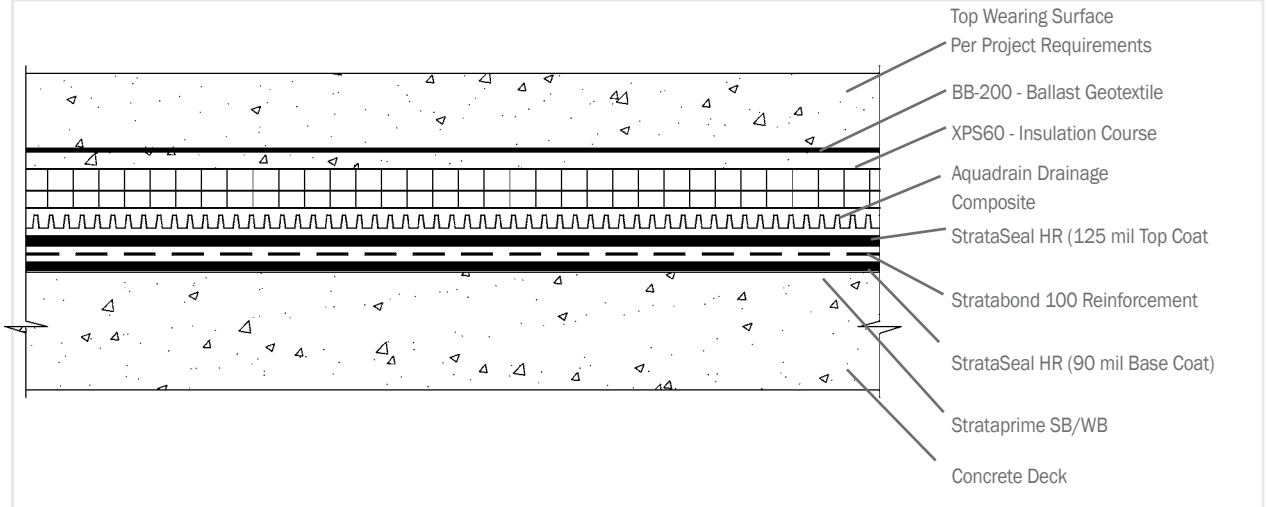

Typical split-slab reinforced membrane assembly

STRATASEAL HR

HOT-APPLIED RUBBERIZED ASPHALT WATERPROOFING

TECHNICAL DATA

PROPERTY	TEST METHOD	TYPICAL VALUE
Solid Content	n/a	100%
Flow	CGSB 37.50 - M89	Max 3 mm @ 140°F
Penetration (1/10th mm)	CGSB 37.50-M89	Max 77°F = 110 Max 122°F = 200
Flash Point	CGSB 37.50-M89	Min 77°F above maximum application temperature
Water Vapor Permeance	CGSB 37.50-M89	Max 1.7 ng/Pa.s.m^2
Toughness	CGSB 37.50-M89	Min 5.5 Joules
Ration of Toughness: Peak Load	CGSB 37.50-M89	Min 0.040
Adhesion	CGSB 37.50-M89	Min 1.0
Viscosity	CGSB 37.50-M89	Max 15
Water Absorption	CGSB 37.50-M89	Min 0.18
Low Temperature Flexibility	CGSB 37.50-M89	No cracking, delamination or adhesion loss
Heat Stability in viscosity, penetration, flow or low temp flexibility after aging	CGSB 37.50-M89	No change

SEPTEMBER 2010

IMPORTANT: The information contained herein supersedes all previous printed versions, and is believed to be accurate and reliable. For the most up-to-date information, please visit www.CETCO.com. CETCO accepts no responsibility for the results obtained through application of this product. CETCO reserves the right to update information without notice.

www.CETCO.com
2870 Forbs Avenue Hoffman Estates, IL 60192
847.851.1800 | 800.527.9948

© 2010 CETCO | PRINTED IN THE USA ON RECYCLED PAPER | FORM:HRTD - 09/10